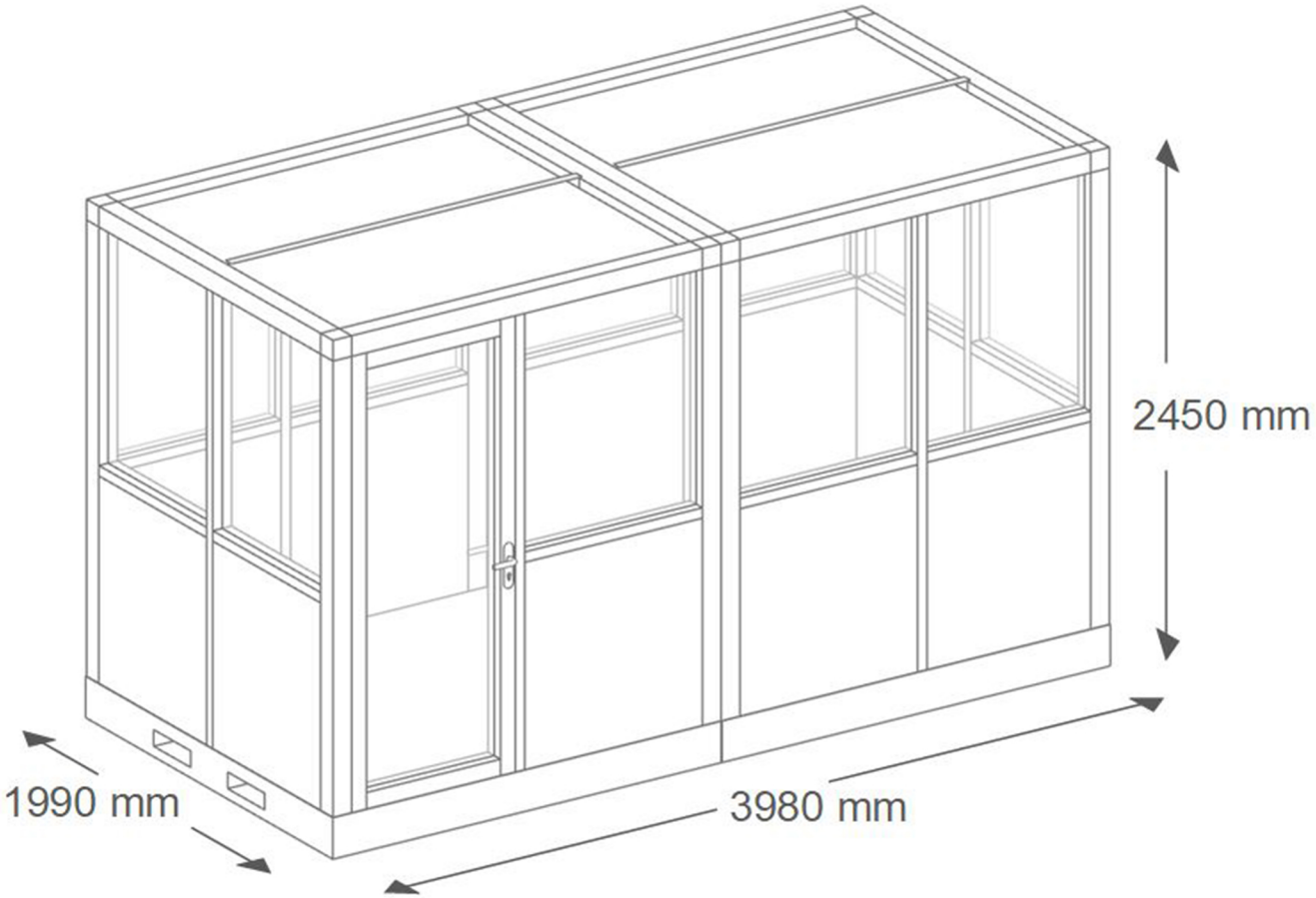

VI-1988X3976-INT-4MM		
Prefab kantoorunit 2 x 4 m	Bloc acclables 2 x 4 m	Office unit 2 x 4 m

LOGGERE
ROOM FOR FUNCTIONAL DESIGN