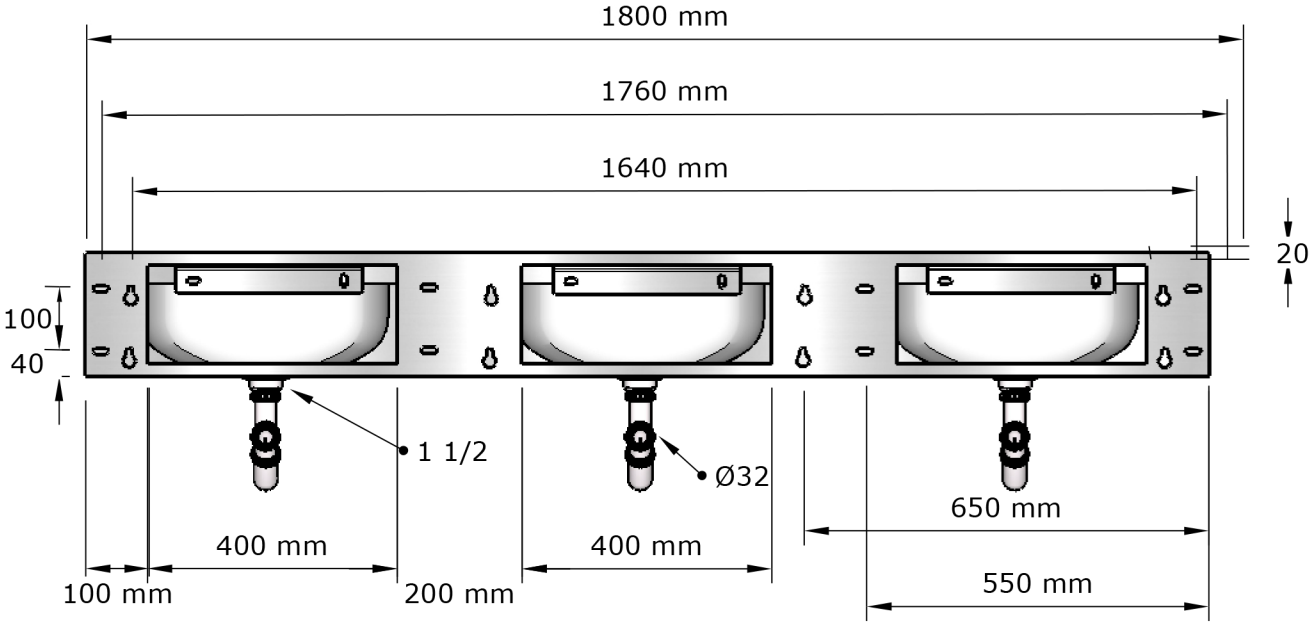

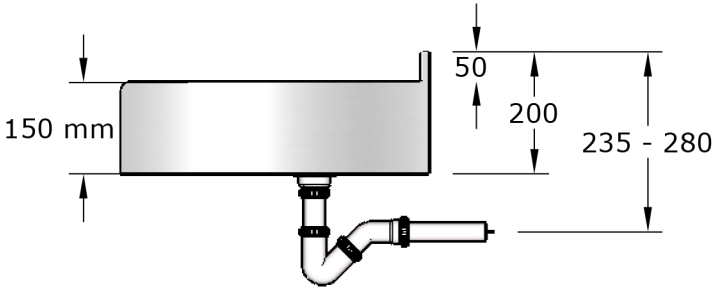

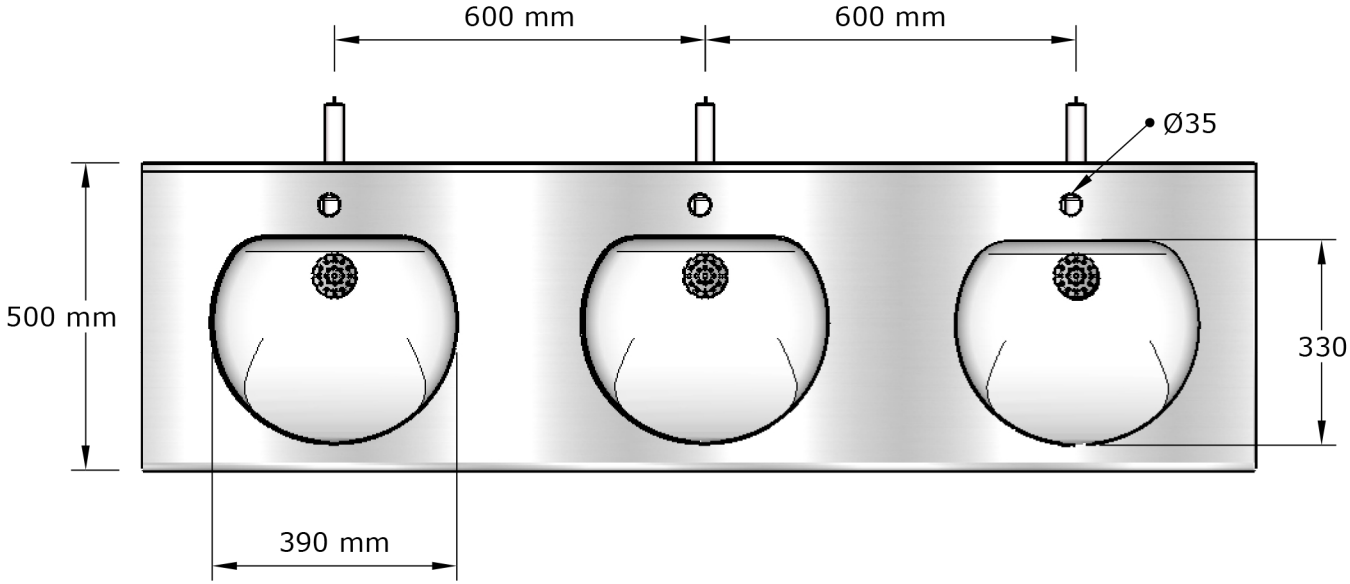

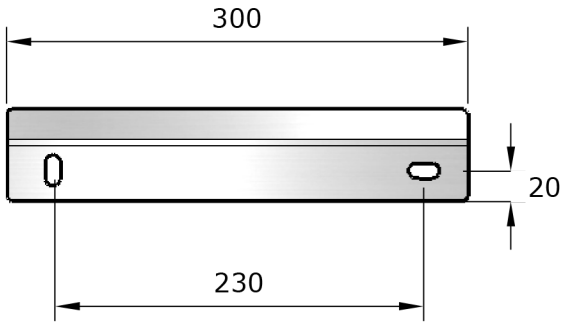

432180		
Meervoudige wastafel Comfort D: 1800mm, 3 wasplaats	Lavabo multiposte Comfort D: 1800mm, 3 poste	Multiple washbasin Comfort D: 1800mm, 3 washplace

LOGGERE
ROOM FOR FUNCTIONAL DESIGN