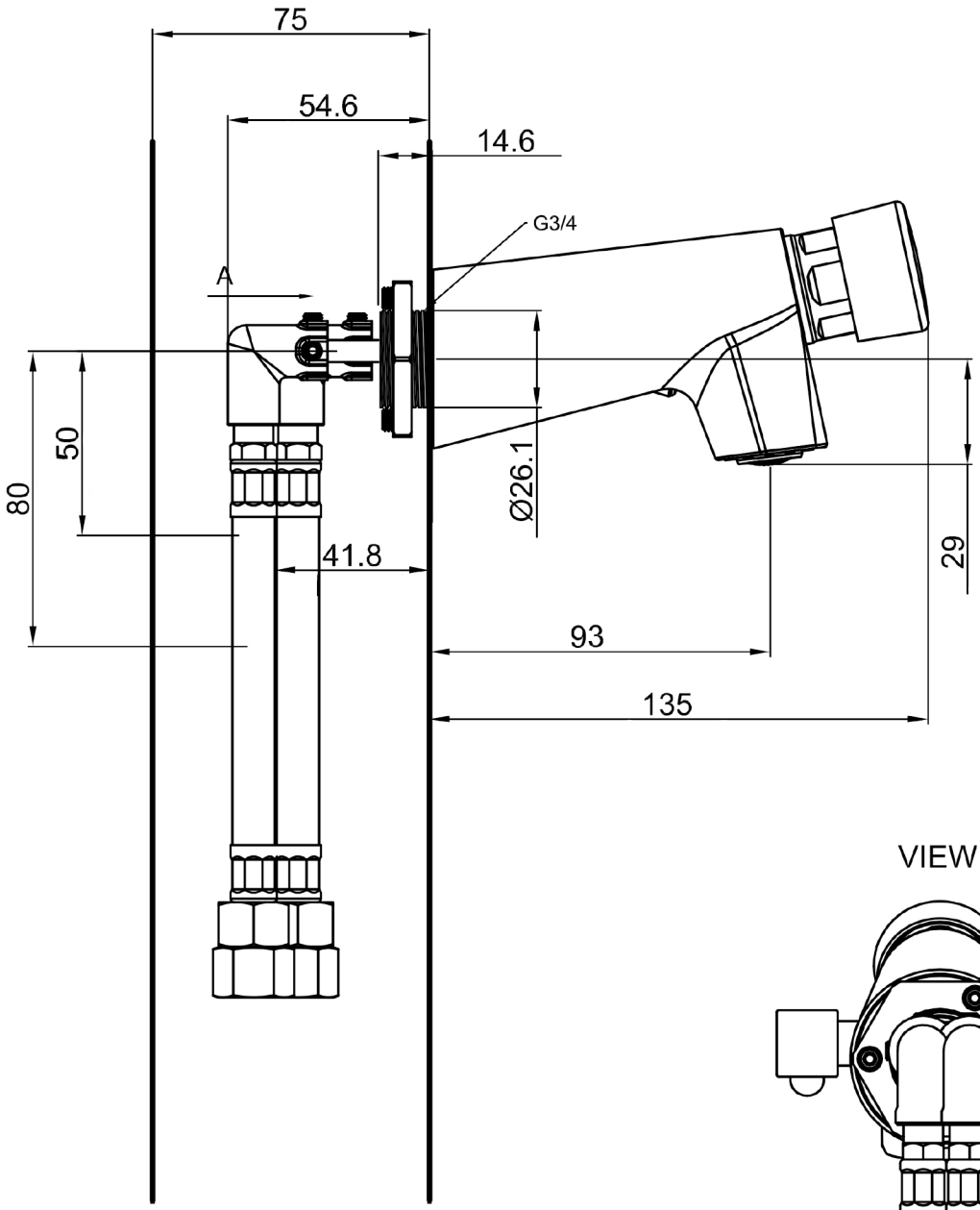

VIEW A

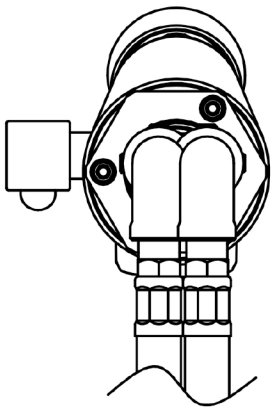

980661		
Zelfsluitende meng wandkraan Tempo IV	Mitigeur mural temporisé Tempo IV	Self-closing mixer wall tap Tempo IV

LOGGERE
ROOM FOR FUNCTIONAL DESIGN