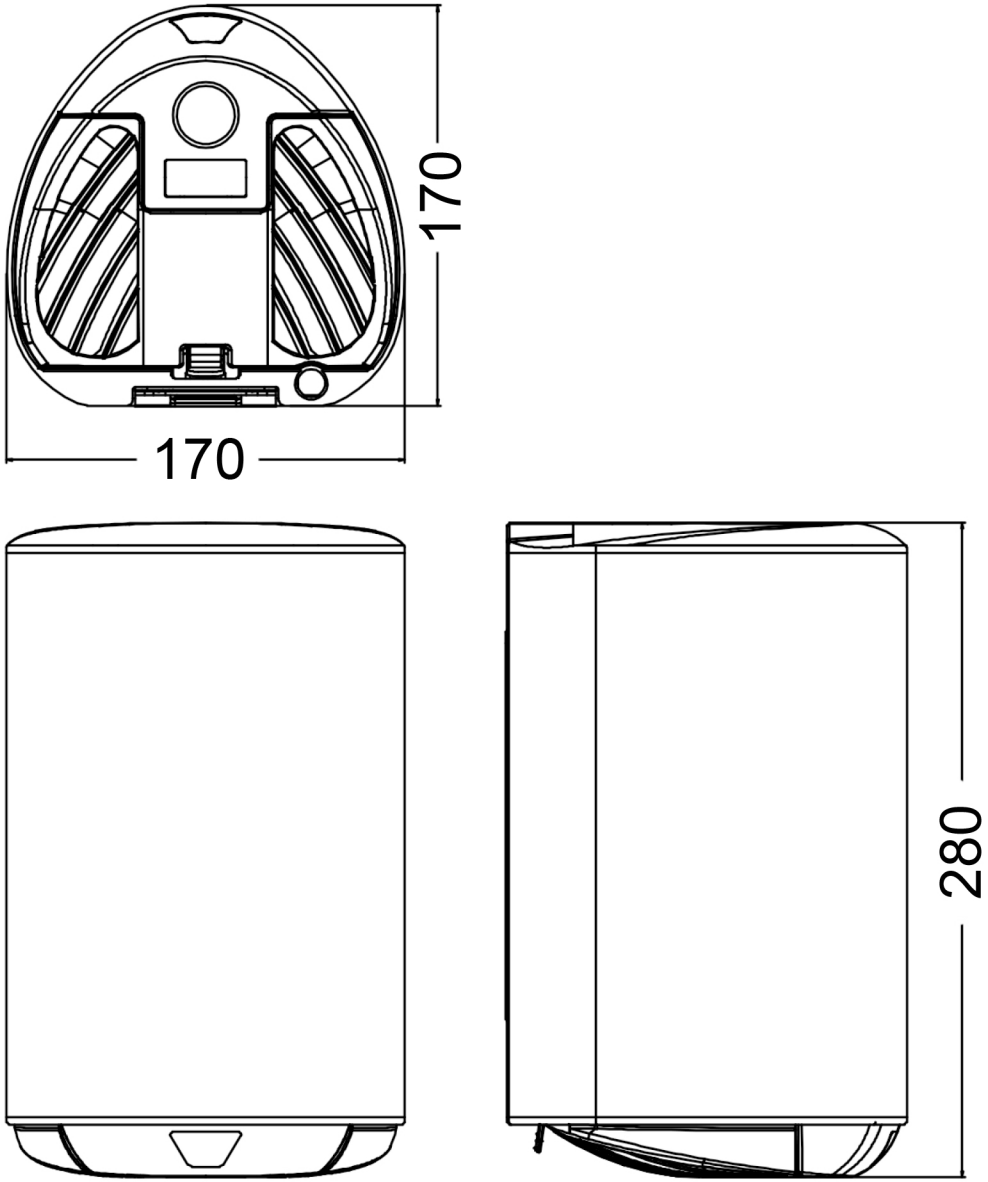

870346

Handendroger Notos II	Sèche-mains Notos II	Hand dryer Notos II

LOGGERE
ROOM FOR FUNCTIONAL DESIGN