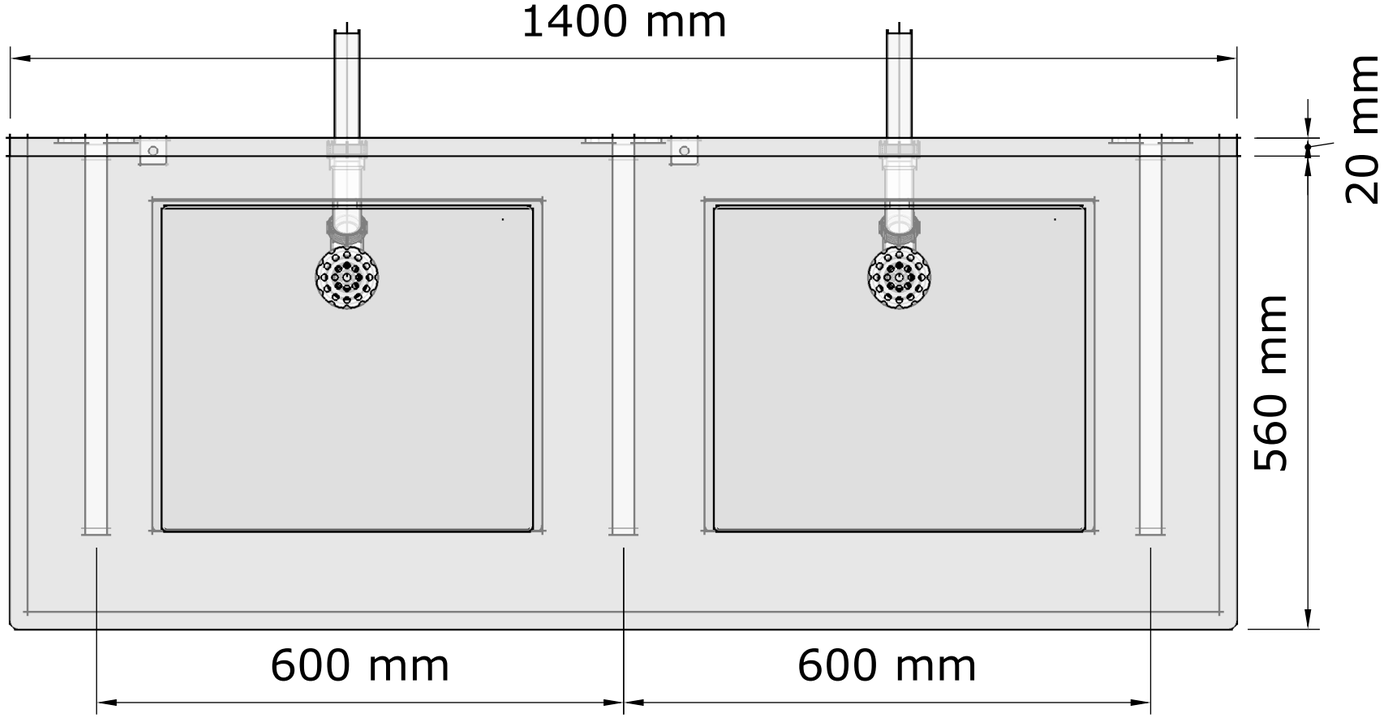
1400 mm
20 mm
560 mm
600 mm
600 mm

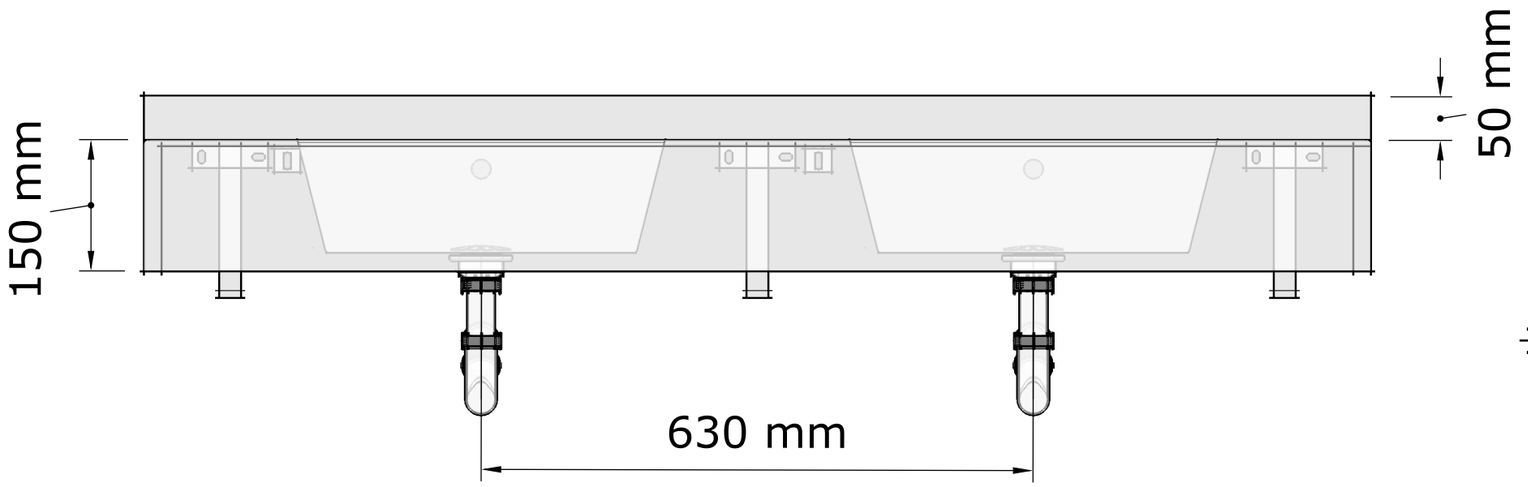
150 mm
50 mm
630 mm

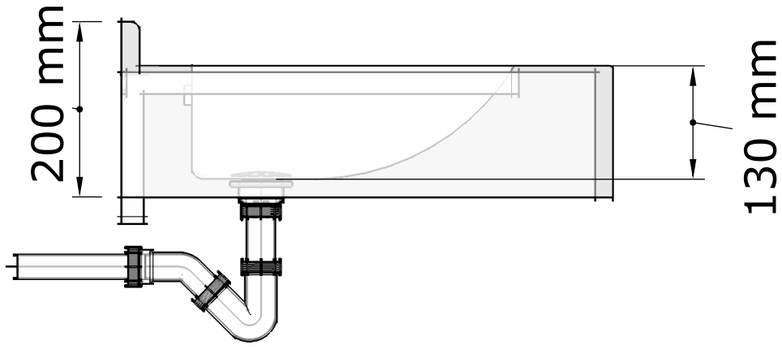
200 mm
130 mm